Parts Catalogue

FLAIL MOWER

(EXPORT MODEL)

HR531

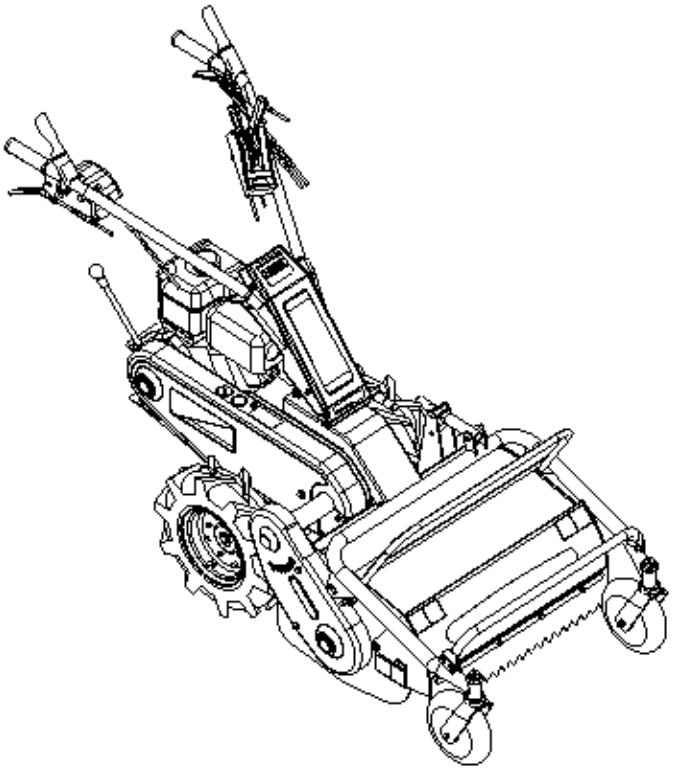

MODEL	CODE
HR531	0256-?????
HR661	80-1614-???-??
HR661A	0211-?????

CONTENTS

Handle ····· 1
Frame ····· 4
Transmission ·····11
Rotary cover····· 16

OREC CO.,LTD.

Update : March 2006

1/20 Handle 1/3

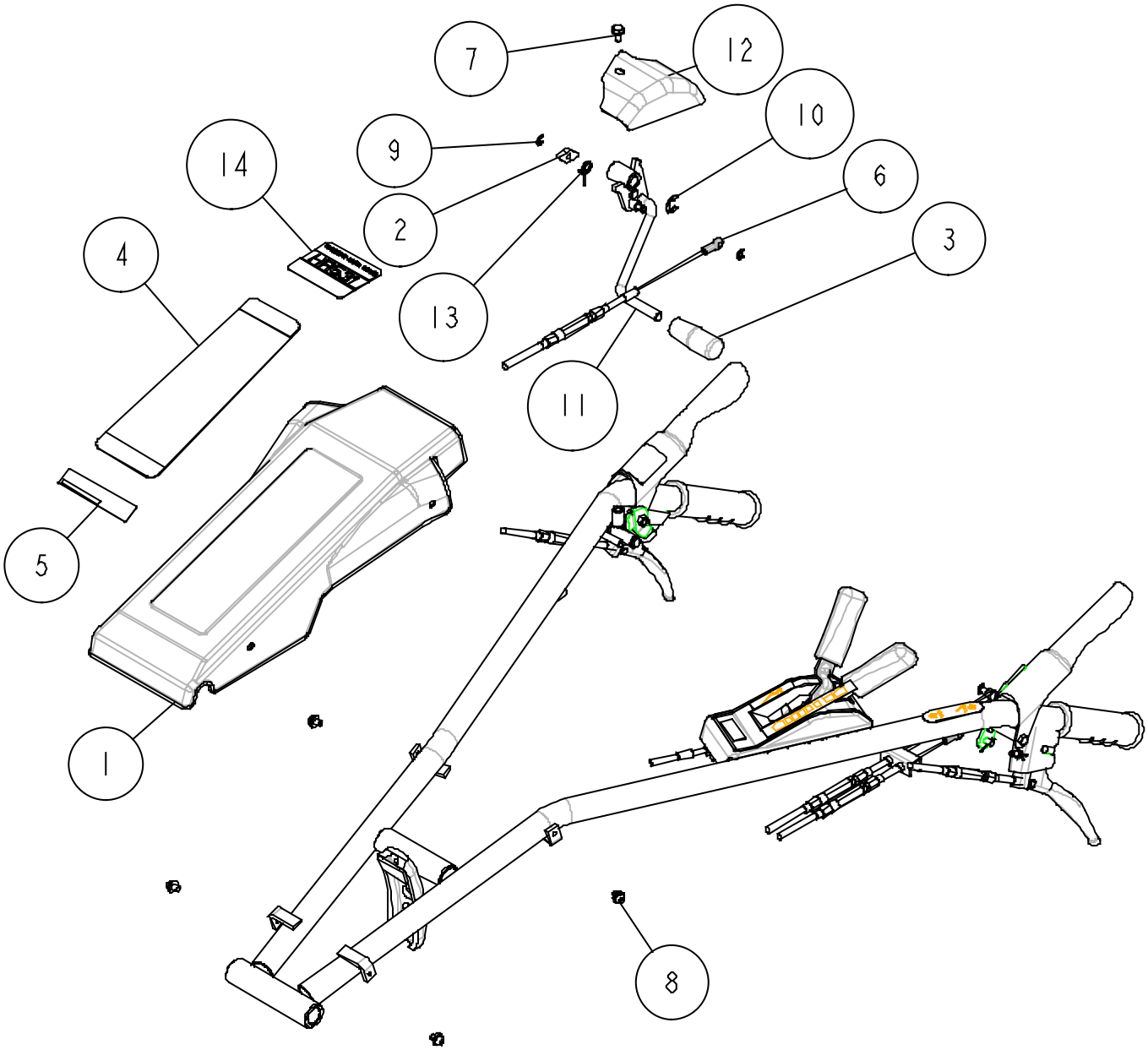

Ref.	Parts Number	Parts Name	Quantity	Remarks
14	0256-71100	Label, Model HR531	1	
13	0211-70400	Stopper return spring	1	
12	0211-20500	Upper cover	1	
11	0211-20400	Blade tension lever	1	
10	89-2521-000100	E Type Ring 10	1	
9	89-2521-000050	E Type Ring 5	2	
8	89-1158-060102	Mini Screw(PWSW) M6*10	4	
7	89-1137-060122	Hexagonal Bolt (PW) M6*12	1	
6	83-1614-932-00	Tension Wire	1	
5	83-1310-902-00	OREC Mark	1	
4	80-1614-904-00	Label, Bonnet	1	
3	80-1417-255-00	Lever Grip(Red) 10	1	
2	80-1417-253-00	Stopper	1	
1	80-1415-223-00	Handle Bonnet	1	

2/20

Handle 2/3

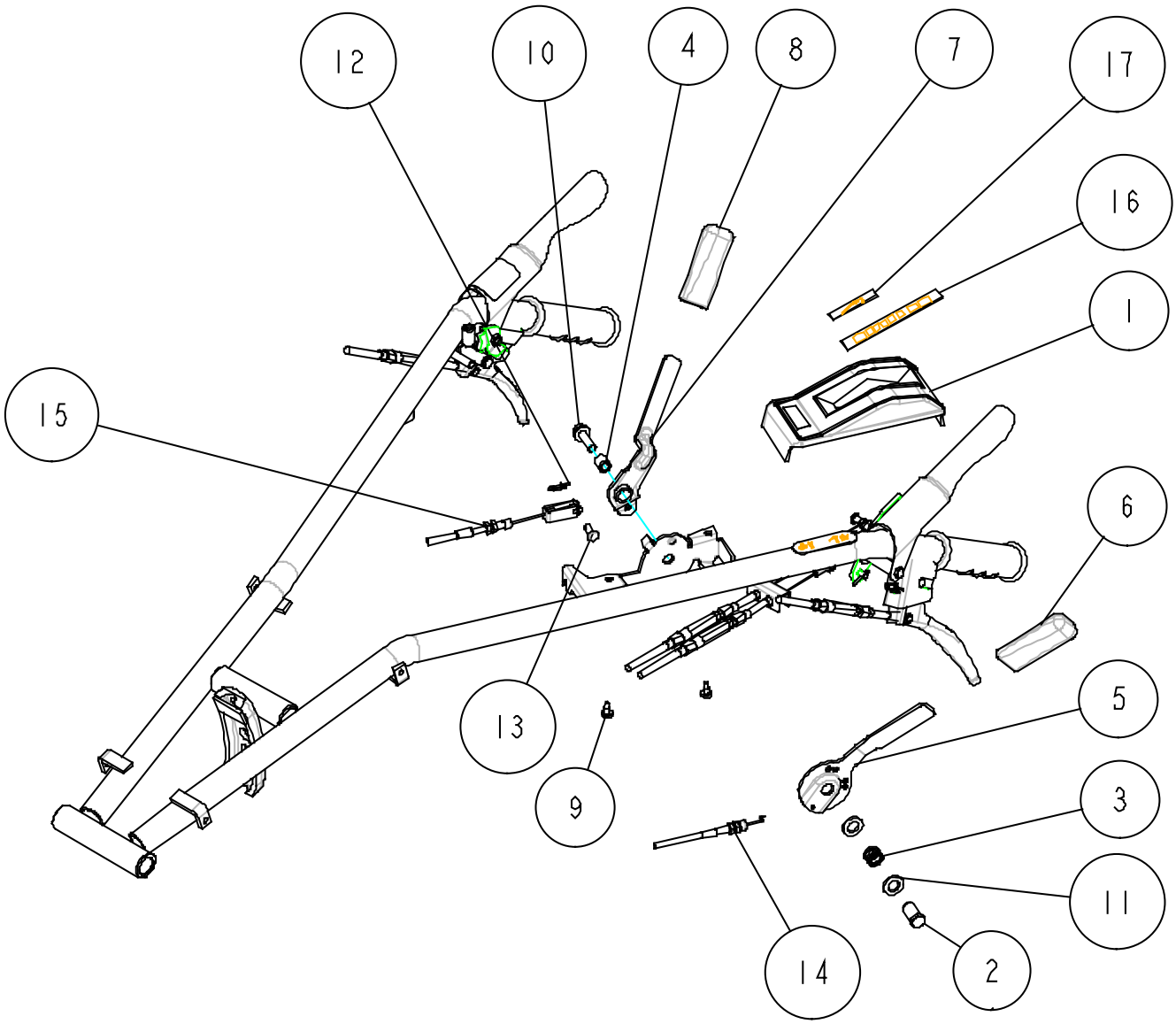

Ref.	Parts Number	Parts Name	Quantity	Remarks
17	0256-71500	Label, Handle Up/Down	1	
16	0256-71400	Label, Throttle	1	
15	0256-70200	Handle Up/Down Wire	1	
14	0256-70100	Throttle Wire	1	
13	89-2181-060162	Flat Head Pin 6*16	1	
12	89-2132-060002	Snap Pin 6	1	
11	89-1711-120003	Washer 13*21	2	
10	89-1239-080302	Mini Hexagonal Bolt (PWSW) M8*30	1	
9	89-1161-050123	Tapping Screw 5*12	2	
8	80-1515-262-00	Arm Grip	1	
7	80-1484-273-10	Differential Lock Lever	1	
6	80-1484-262-00	Arm Grip (Red)	1	
5	80-1437-261-00	Throttle Lever	1	
4	80-1020-270-00	Inner Collar	1	
3	80-1020-263-00	Control Lever Shaft Spring	1	
2	80-1020-262-00	Control Lever Shaft	1	
1	80-1020-231-00	Control Cover	1	

3/20

Handle 3/3

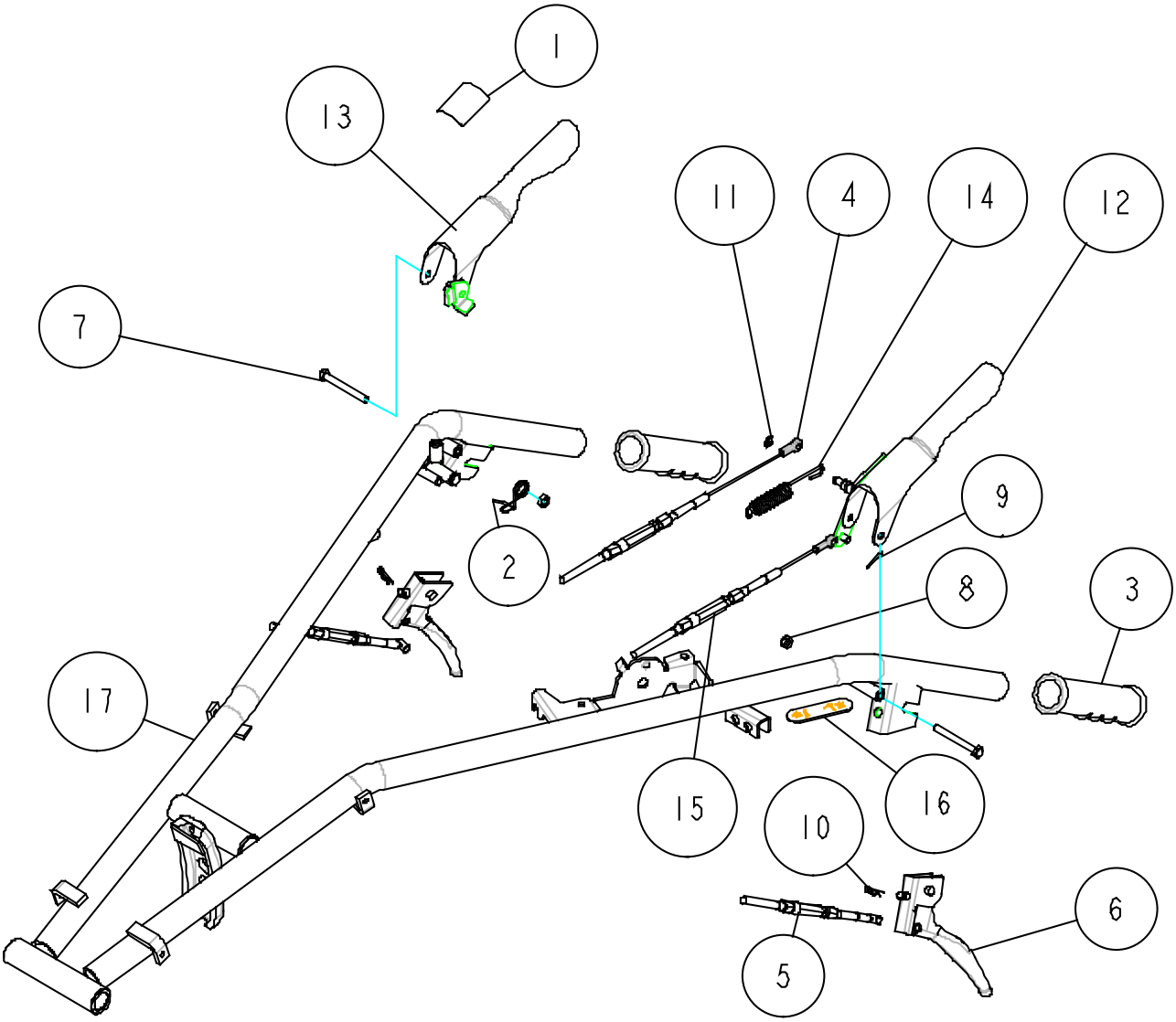

Ref.	Parts Number	Parts Name	Quantity	Remarks
17	0256-10100	Handle CMP	1	
16	0211-70600	Label, Driving	1	
15	0211-70500	Brake Wire	1	
14	0211-20600	Brake Spring	1	
13	0211-20300	Blade clutch lever	1	
12	0211-20200	Driving clutch lever	1	
11	89-2521-000050	E Type Ring 5	1	
10	89-2131-060002	Snap Pin 6	2	
9	89-2120-200152	Split Pin 2*15	1	
8	89-1551-060002	Hexagonal U Nut M6	2	
7	89-1113-060552	Hexagonal Bolt (8T) M6*55	2	
6	83-1761-457-00	Side Clutch Lever	2	
5	83-1614-962-00	Side Clutch Wire	2	
4	83-1614-932-00	Tension Wire	1	
3	83-1560-414-00	Handle Grip 27	2	
2	80-1417-971-00	Blade clutch return spring	1	
1	80-1417-918-00	Label, Cutting	1	

Frame 1/7

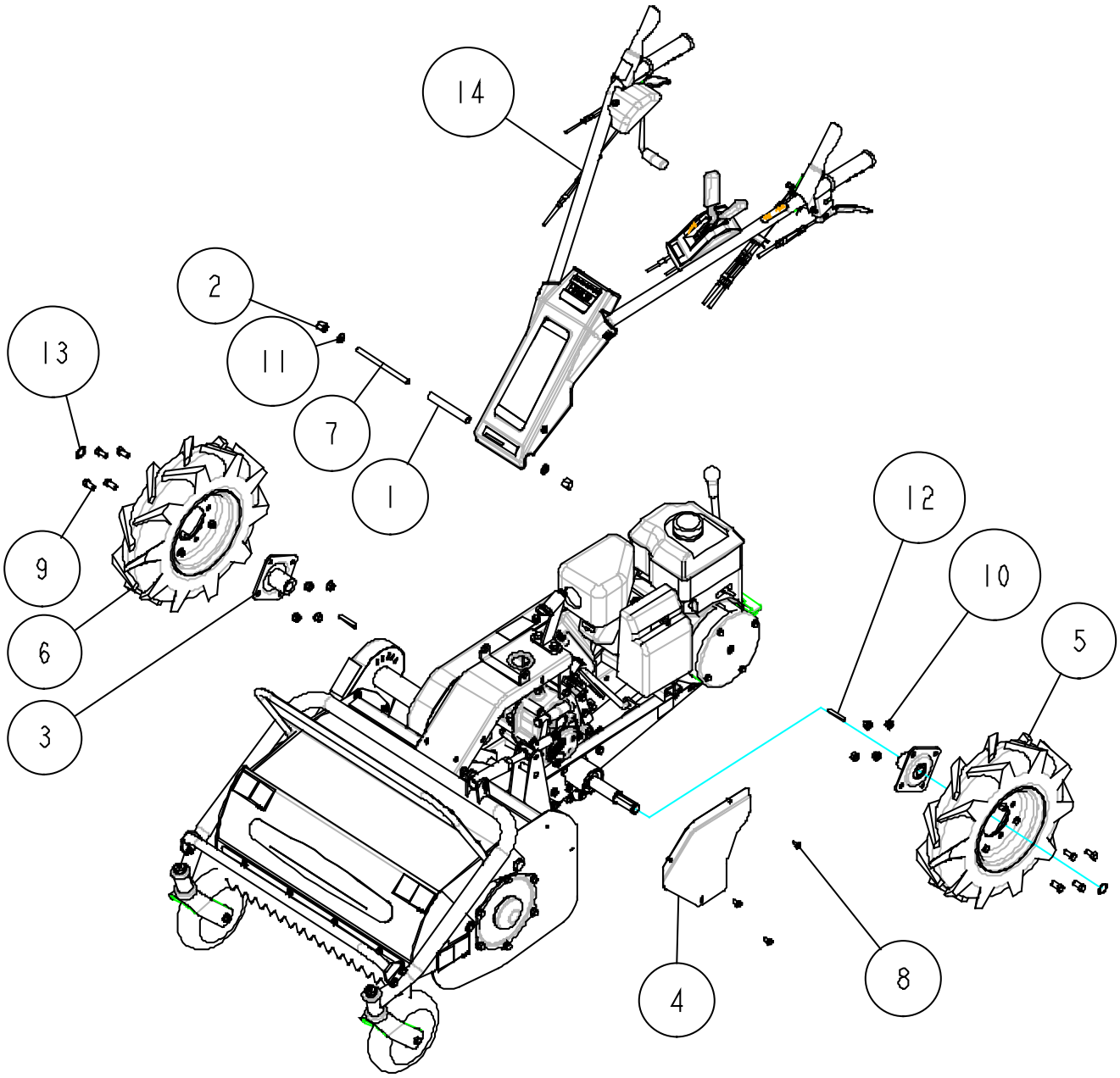

Ref.	Parts Number	Parts Name	Quantity	Remarks
14		Handle		
13	89-2511-000220	Snap Ring (S22)	2	
12	89-2150-070500	Key 7*50 (Round)	2	
11	89-1750-120002	Spring Washer 12	2	
10	89-1543-100002	Mini Hexagonal Nut(SW) M10	8	
9	89-1211-100202	Mini Hexagonal Bolt M10*20	8	
8	89-1137-060152	Hexagonal Bolt(PW) M6*15	3	
7	83-1210-133-00	Setting Bolt M12X160	1	
6	80-1711-412-00	Tire Assy (Right) 400-7	1	
5	80-1711-411-00	Tire Assy (Left) 400-7	1	
4	80-1614-746-10	Side Cover	1	
3	80-1565-413-00	Wheel Boss	2	
2	80-1310-228-00	Handle Fix Nut	2	
1	80-1210-222-00	Handle Setting Collar	1	

Frame 2/7

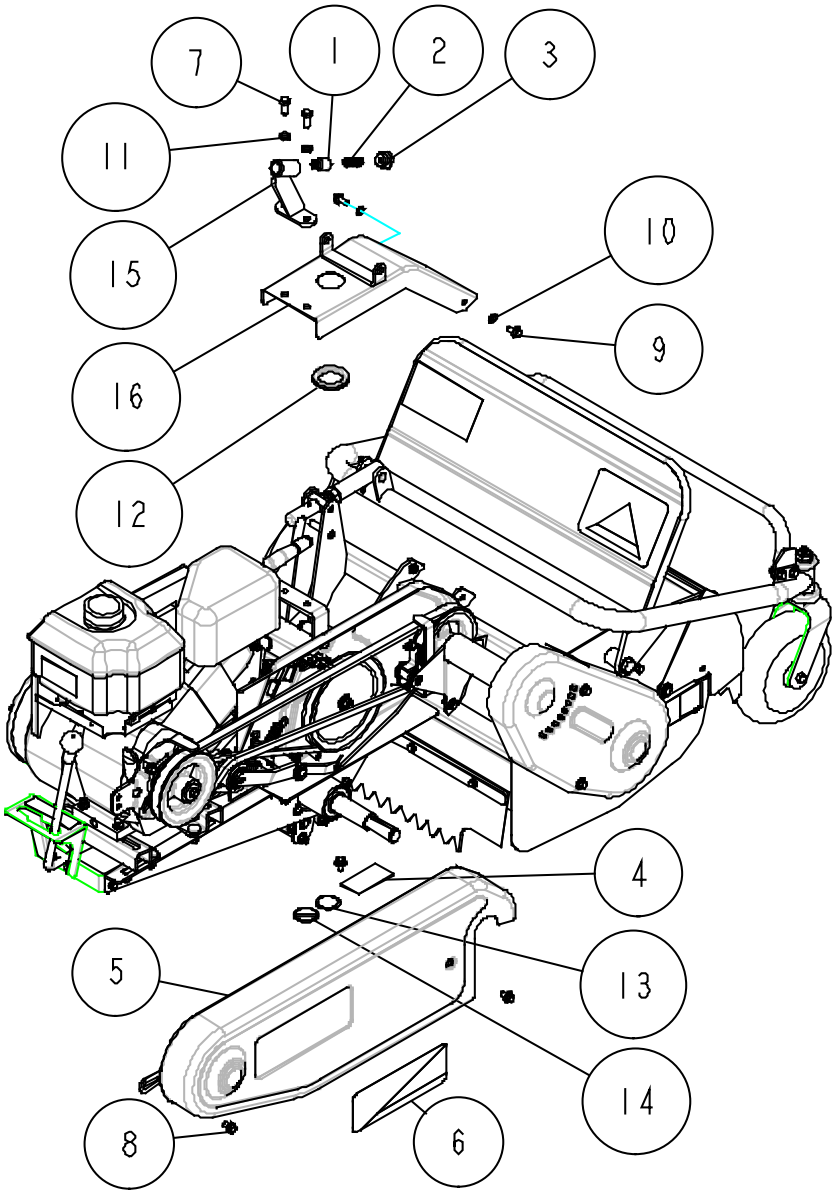

Ref.	Parts Number	Parts Name	Quantity	Remarks
16	0256-10200	Under Bonnet CMP	1	
15	0251-11000	Stopper for Handle Up/Down	1	
14	0223-72910	Attention Mark for Slope	1	
13	0215-83200	Label, Protection Equipment	1	
12	0207-70800	Grommet 45-3.5	1	
11	89-1750-100002	Spring Washer 10	2	
10	89-1750-080002	Spring Washer 8	2	
9	89-1253-080162	Flange Hexagonal Bolt (8T) M8*16	2	
8	89-1233-080162	Mini Hexagonal Bolt (PWSW) M8*16	3	
7	89-1211-100202	Mini Hexagonal Bolt M10*20	2	
6	80-1614-905-00	Label, Belt Case	1	
5	80-1614-504-20	Belt Cover CMP	1	
4	80-1488-926-10	Label, Caution for Knife	1	
3	80-1310-215-00	Stopper Cap	1	
2	80-1210-217-00	Stopper Spring	1	
1	80-1210-216-00	Stopper Pin	1	

Frame 3/7

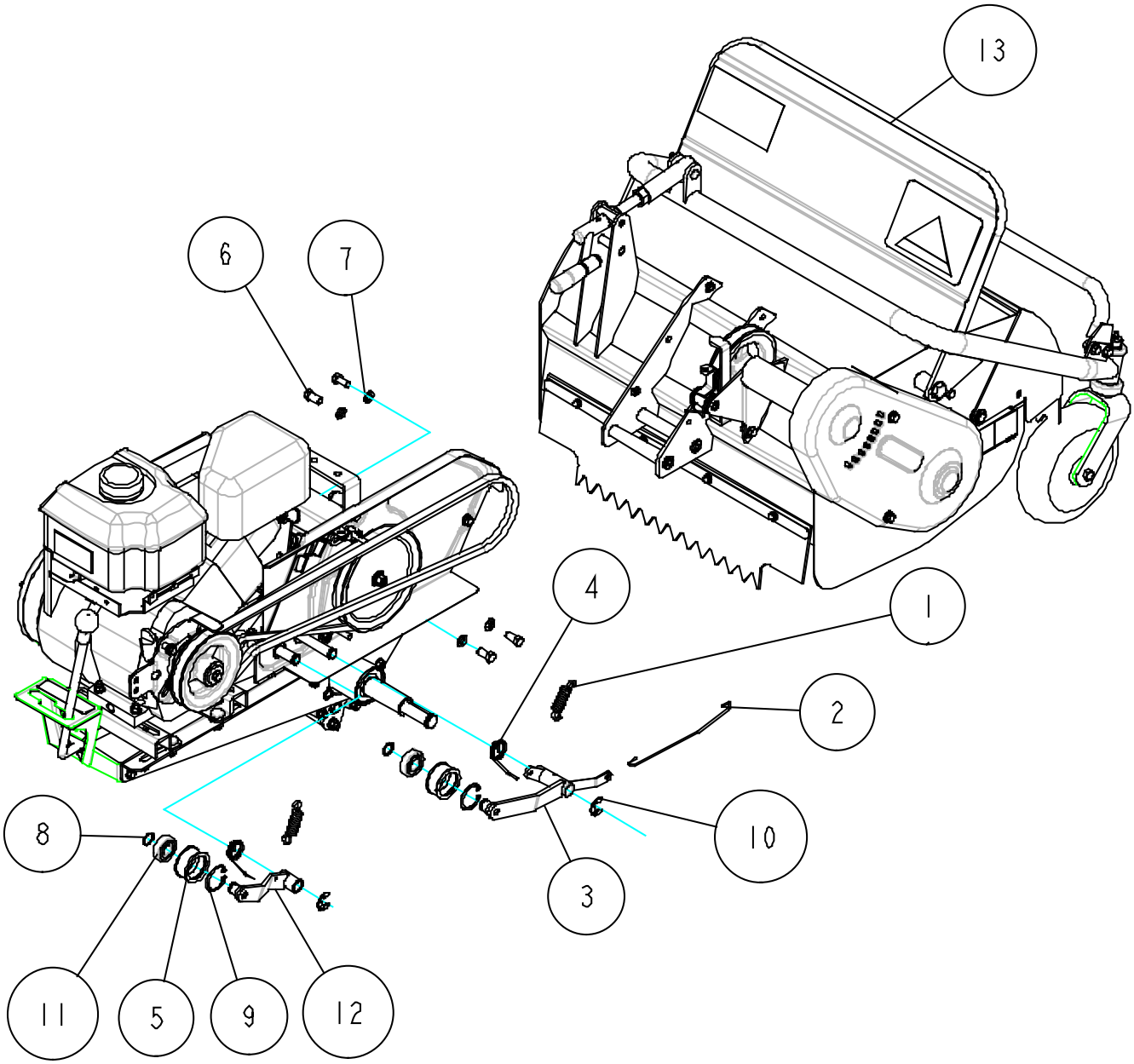

Ref.	Parts Number	Parts Name	Quantity	Remarks
13		Rotary		
12	0211-54200	Driving Tension Arm	1	
11	89-3115-062034	Bearing 6203 2RS	2	
10	89-2521-000150	E Type Ring 15	2	
9	89-2512-000400	Snap Ring (R40)	2	
8	89-2511-000170	Snap Ring (S17)	2	
7	89-1750-100002	Spring Washer 10	4	
6	89-1213-100202	Mini Hexagonal Bolt (8T) M10*20	4	
5	83-1032-765-00	Tension Pulley	2	
4	80-1614-552-00	Tension Spring	2	
3	0256-40400	Knife Tension Arm	1	
2	80-1614-374-30	Brake Rod	1	
1	80-1560-551-00	Return Spring	2	

Frame 4/7

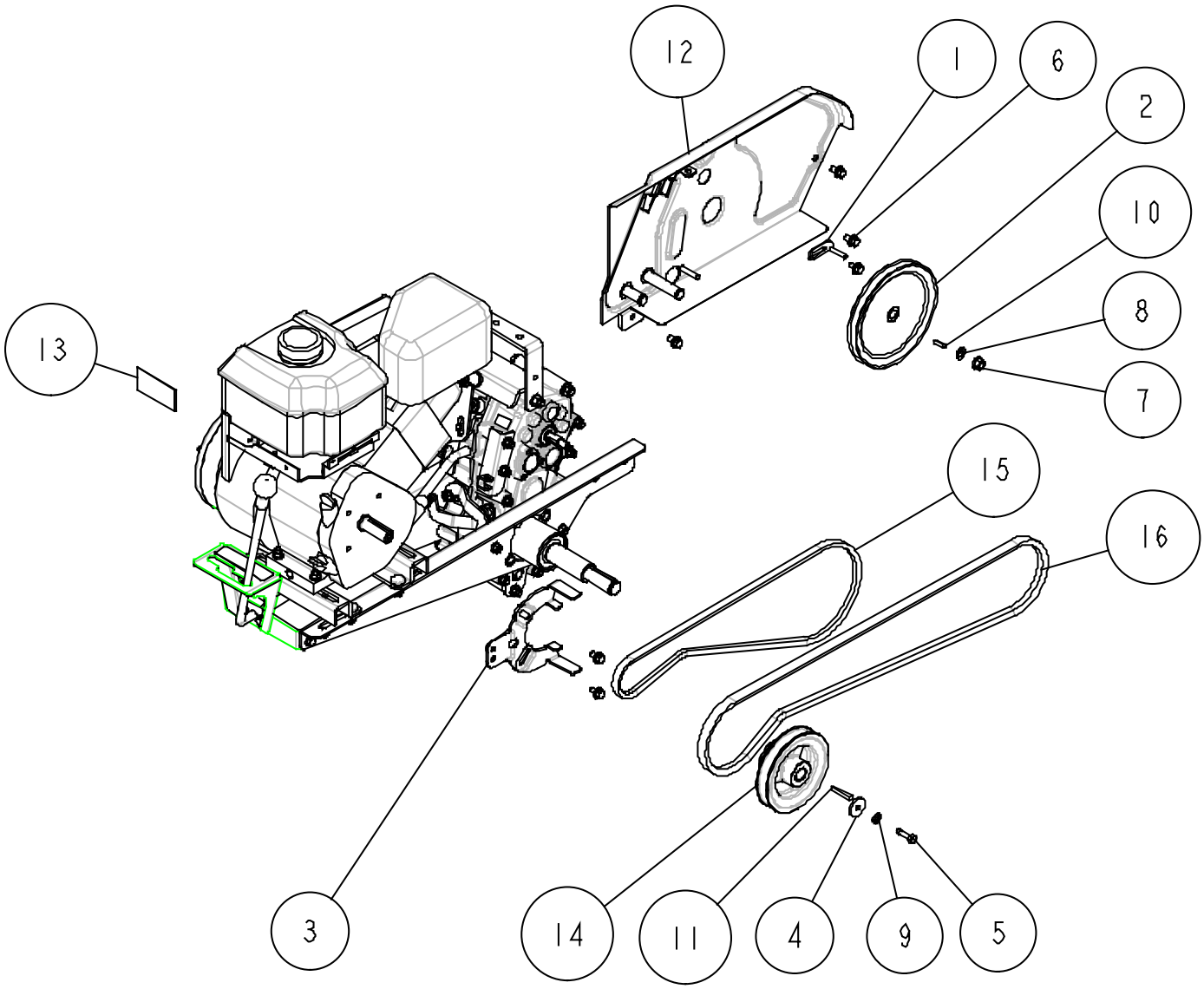

Ref.	Parts Number	Parts Name	Quantity	Remarks
16	89-6123-006301	V Belt LB-63	1	
15	89-6122-004601	V Belt LA-46	1	
14	0256-40300	Engine Pulley	1	
13	0214-72100	Label, Caution for Engine etc	1	
12	0211-50100	Belt Cover Inside CMP	1	
11	89-2151-050400	Key 5*40(harf round)	1	
10	89-2150-050200	Key 5*20(Round)	1	
9	89-1750-080002	Spring Washer 8	1	
8	89-1711-100002	Flat Washer 10	1	
7	89-1543-100002	Mini Hexagonal Nut(SW) M10	1	
6	89-1233-080162	Mini Hexagonal Bolt (PWSW) M8*16	6	
5	0023-72300	Hexagonal Bolt(8T) M8*28(Meck)	1	
4	83-1020-312-00	Washer 8*30*3.2	1	
3	80-1614-561-20	Belt Holder	1	
2	80-1614-521-00	Transmission Pulley	1	
1	80-1321-561-10	Belt Holder	1	

Frame 5/7

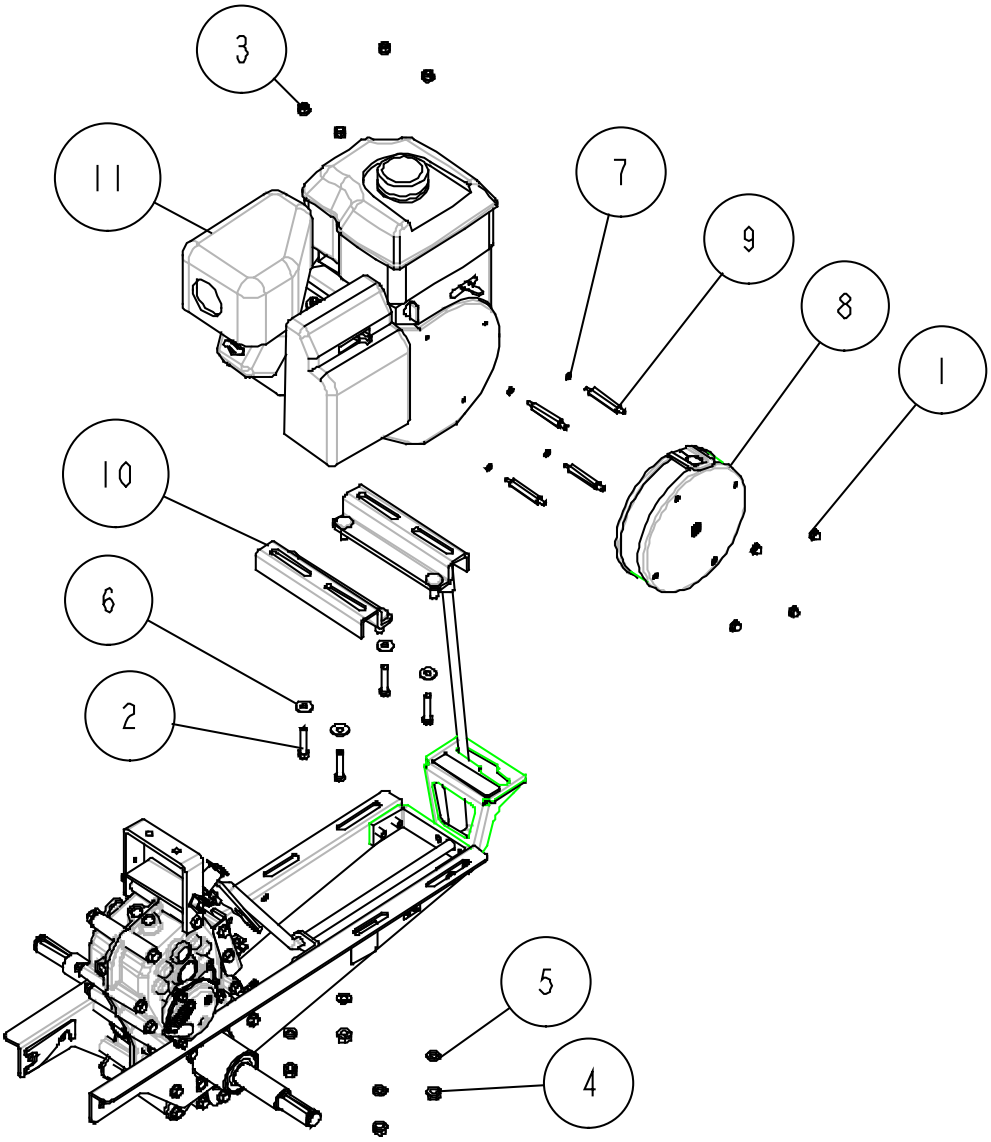

Ref.	Parts Number	Parts Name	Quantity	Remarks
11		Engine	1	
10	0256-20100	Free Base	2	
9	0229-61600-00	Recoil Cover Setting Bolt	4	
8	0239-61100	Recoil Cover (R)	1	
7	89-1750-050003	Spring Washer 5	4	
6	89-1713-080002	Flat Washer 8	4	
5	89-1711-100002	Flat Washer 10	4	
4	89-1543-100002	Mini Hexagonal Nut(SW) M10	4	
3	89-1543-080002	Mini Hexagonal Nut (SW) M8	4	
2	89-1213-080402	Mini Hexagonal Bolt (8T) M8*40	4	
1	83-1575-189-00	Flange Cap Nut M6	4	

Frame 6/7

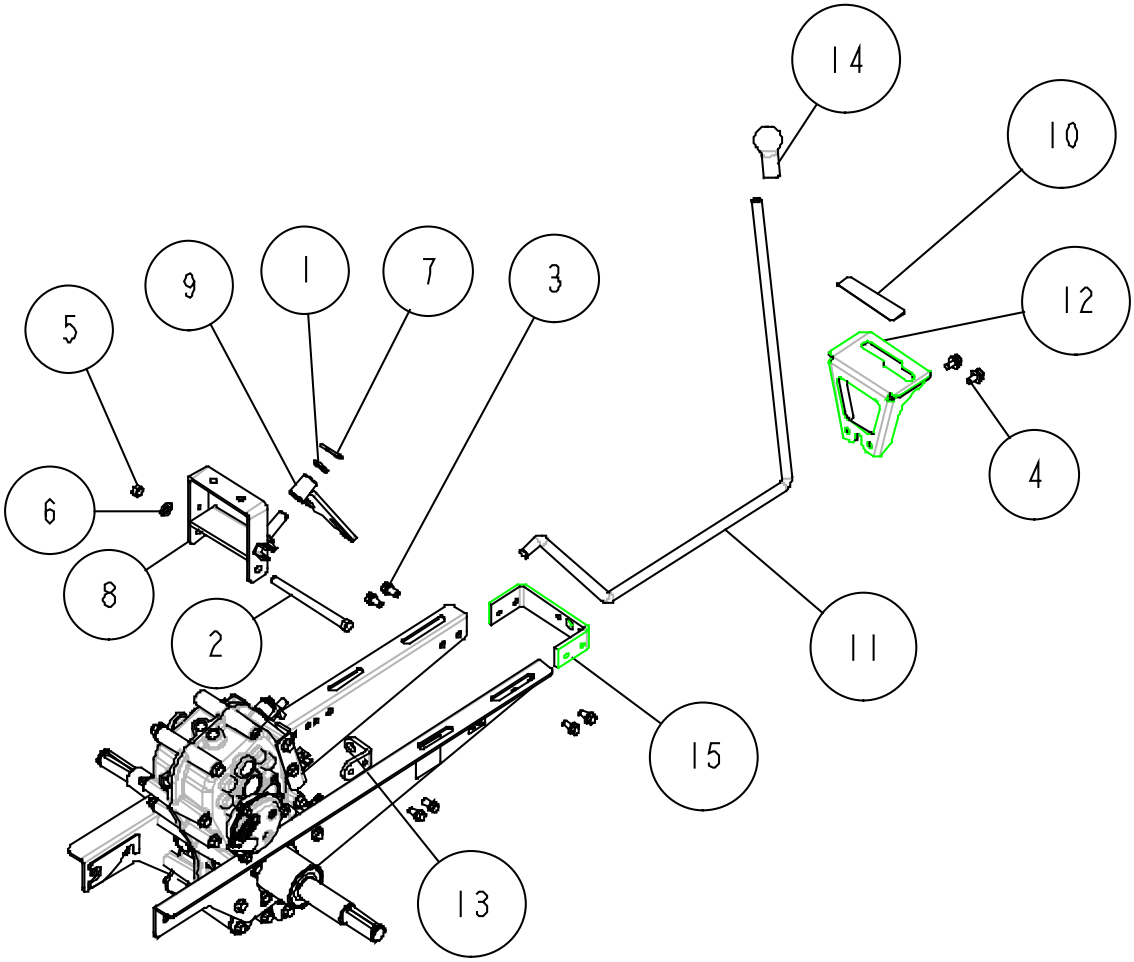

Ref.	Parts Number	Parts Name	Quantity	Remarks
15	0256-20500	Rear Bracket	1	
14	0253-79100	Lever Grip 12.7	1	
13	0253-22500	Change Rod Setting	1	
12	0253-22400	Change Guide CMP	1	
11	0253-16100	Change Lever CMP	1	
10	0251-70400	Label, Change	1	
9	0251-11600	Change Lever Arm CMP	1	
8	0251-11300	Change Plate	1	
7	89-2131-120002	Snap Pin 12	1	
6	89-1750-100002	Spring Washer 10	1	
5	89-1611-100042	Mini Hexagonal Nut M10	1	
4	89-1233-080162	Mini Hexagonal Bolt (PWSW) M8*16	2	
3	89-1232-080162	Mini Hexagonal Bolt (SW) M8*16	6	
2	89-1213-101302	Mini Hexagonal Bolt (8T) M10*130	1	
1	83-1565-329-00	Washer 13*22*2.3	1	

Frame 7/7

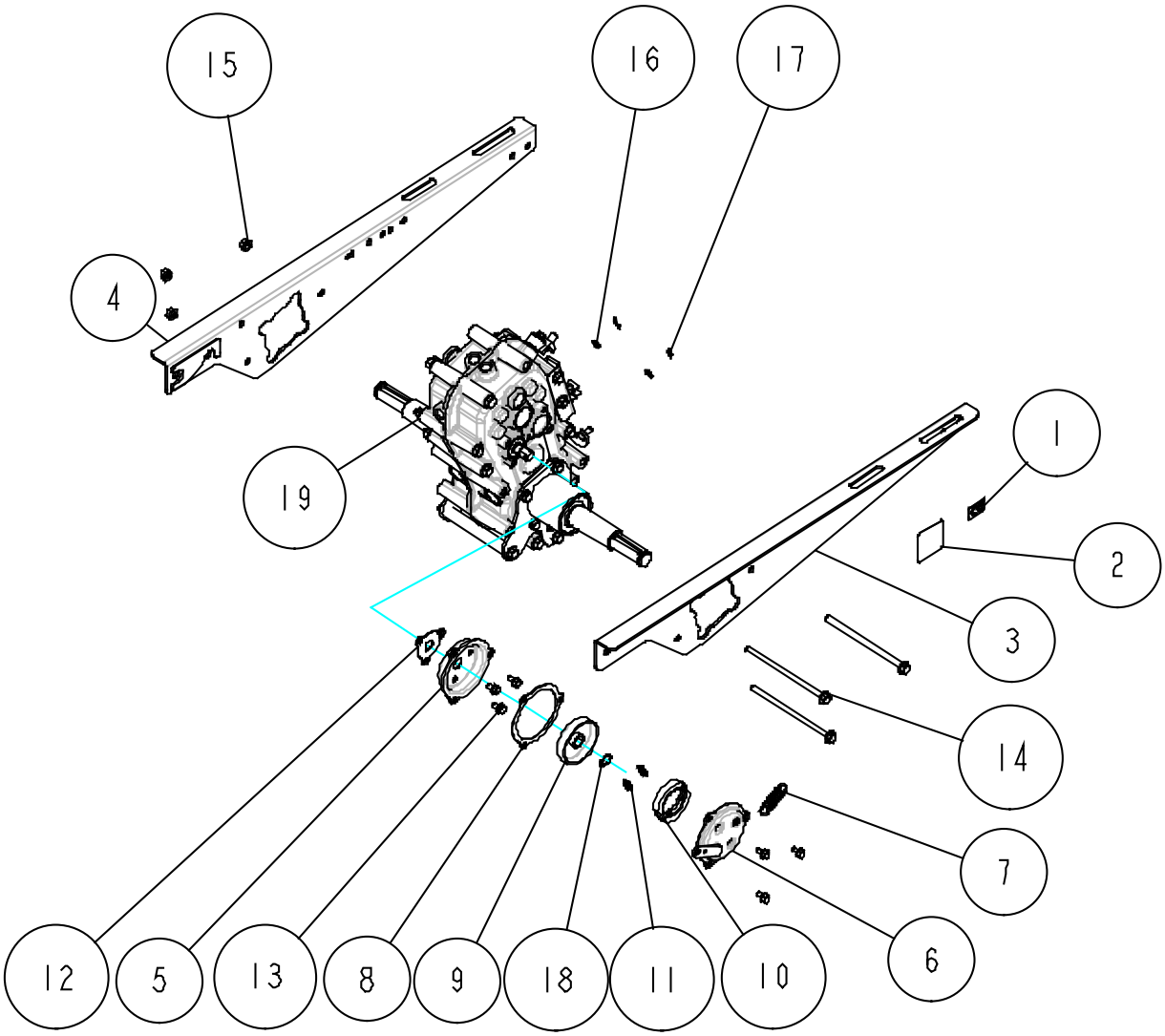

Ref.	Parts Number	Parts Name	Quantity	Remarks
19		Transmission		
18	89-2511-000140	Snap Ring (S14)	1	
17	89-2132-060002	Snap Pin 6	2	
16	89-1711-060002	Flat Washer 6	2	
15	89-1543-080002	Mini Hexagonal Nut (SW) M8	3	
14	89-1253-081453	Small Flange Bolt (8T)M8*145	3	
13	89-1132-060122	Hexagonal Bolt (SW) M6*12	6	
12	85-1445-317-00	Brake Packing(small)	1	
11	85-1711-317-00	Shoe Return Spring	2	
10	85-1711-316-00	Brake Shoe	1	
9	85-1711-315-00	Brake Drum	1	
8	0211-31800	Brake Packing(large)	1	
7	80-1614-315-00	Return Spring	1	
6	80-1614-314-00	Brake Cover	1	
5	80-1614-312-00	Brake Cover CMP	1	
4	80-1614-302-20	Main Frame(R) CMP	1	
3	80-1614-301-20	Main Frame(L) CMP	1	
2	80-1020-932-00	Label, Noise 100db	1	
1	80-1010-933-00	Label, CE	1	

Transmission 1/5

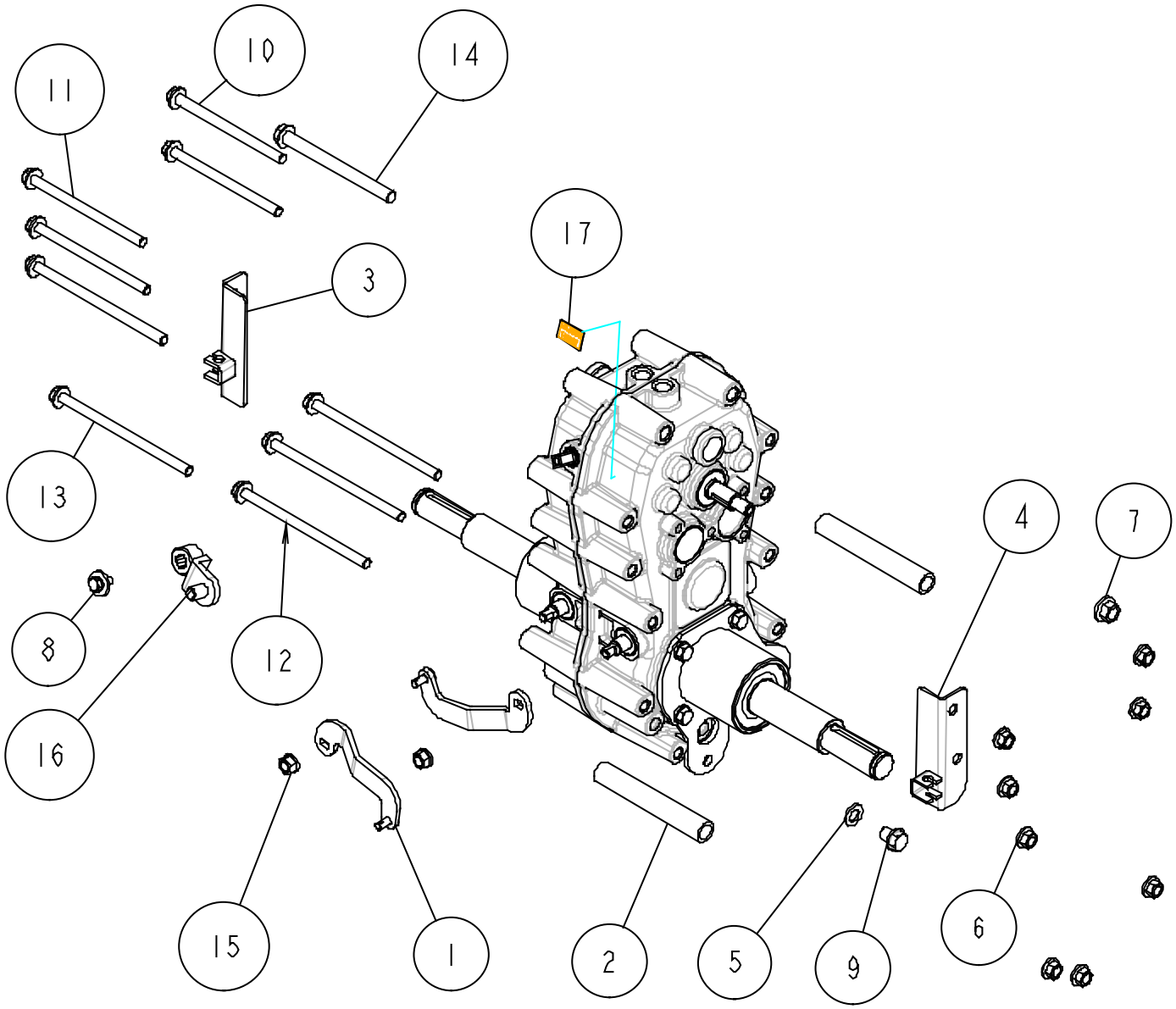

Ref.	Parts Number	Parts Name	Quantity	Remarks
17	0256-71200	Label, Transmission	1	
16	0251-04300	Change Arm CMP	1	
15	89-1543-080002	Mini Hexagonal Nut (SW) M8	2	
14	89-1254-101153	Flange Hexagonal Bolt M10*1.25*115	1	
13	89-1253-081403	Flange Hexagonal Bolt (8T) M8*140	3	
12	89-1253-081353	Flange Hexagonal Bolt (8T) M8*135	2	
11	89-1253-081203	Small Flange Bolt (8T)M8*120	2	
10	89-1253-081153	Small Flange Bolt (8T)M8*115	2	
9	89-1251-100122	Flange Hexagonal Bolt M10*12	1	
8	83-1565-111-00	Hexagonal Bolt(with Big Washer) M6x16	1	
7	83-1493-255-00	Flange Lock Nut M10(Slender)	1	
6	83-1484-255-00	Rock Nut ZUF M8	9	
5	83-1020-349-00	Copper Packing 10.5*18*1.6	1	
4	80-1614-198-10	Side Clutch Wire Stopper (R)	1	
3	80-1565-197-00	Side Clutch Wire Stopper (L)	1	
2	80-1565-159-00	Shaft BB Reinforce Pipe	2	
1	80-1565-153-00	Side Clutch Arm	2	

Transmission 2/5

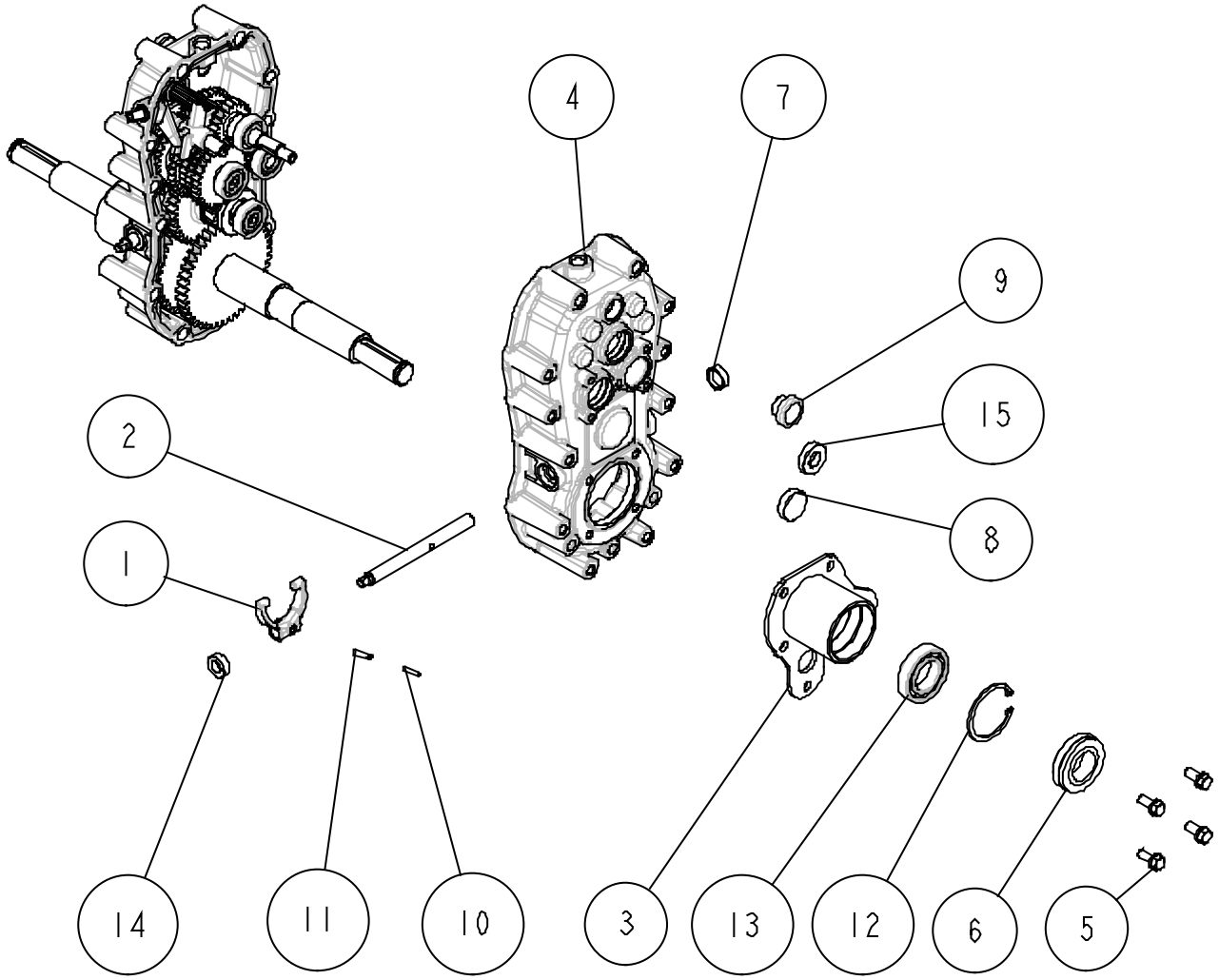

Ref.	Parts Number	Parts Name	Quantity	Remarks
15	89-5121-153007	Oil Seal UE 15.30.7	1	
14	89-5121-122207	Oil Seal UE 12.22.7	1	
13	89-3111-060064	Bearing 6006	1	
12	89-2512-000550	Snap Ring (R55)	1	
11	89-2111-050020	Spring Pin 5*20	1	
10	89-2111-030020	Spring Pin 3*20	1	
9	83-1517-685-00	Oil Cap	1	
8	83-1415-672-00	Blind Cover 30	1	
7	83-1415-671-00	Blind Cover 22	1	
6	83-1415-662-00	Oil Seal AP 35.55.8	1	
5	83-1415-127-00	Seal Bolt (SW) M8*20	4	
4	80-1614-103-00	Transmission Case (R)	1	
3	80-1565-156-00	Shaft BB Case (R)	1	
2	80-1425-112-00	Driving Clutch Folk Shaft	1	
1	80-1415-114-00	Side Clutch Folk	1	

Transmission 3/5

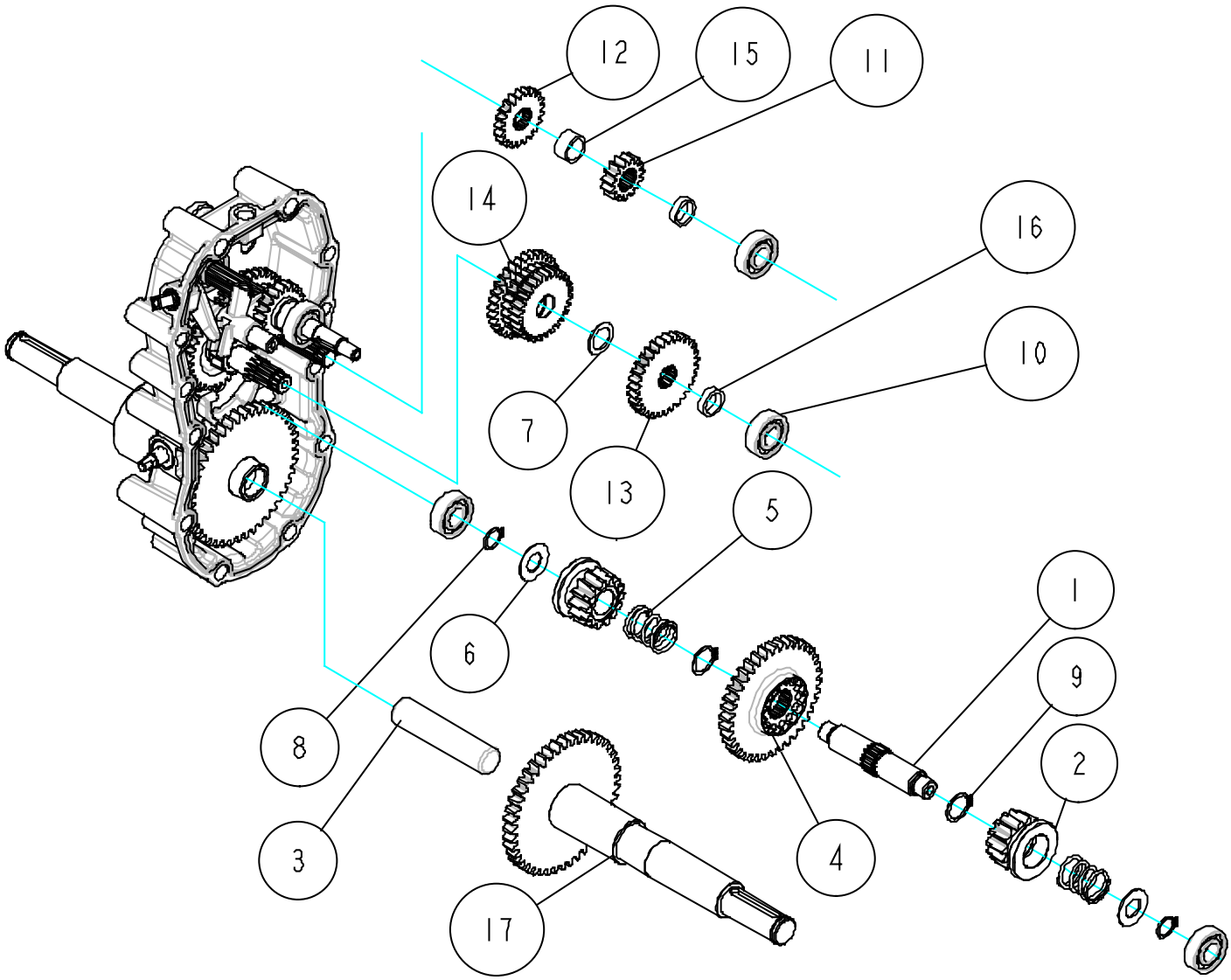

Ref.	Parts Number	Parts Name	Quantity	Remarks
17	0256-00100	Axle CMP	1	
16	0223-02500	Collar 6L	2	
15	0223-02400	Collar 11L	1	
14	0223-01600	3rd Shaft Gear 28T CMP	1	
13	0223-01500	3rd Shaft Gear 31T	1	
12	0223-01100	2nd Shaft Gear 21T	1	
11	0223-00900	2nd Shaft Gear 15T	1	
10	89-3111-062024	Bearing 6202	4	
9	89-2511-000200	Snap Ring (S20)	2	
8	89-2511-000150	Snap Ring (S15)	2	
7	83-1830-368-00	Thrust Washer 18*26*1.0	1	
6	83-1633-362-10	Thrust Washer 15*30*1.2	2	
5	80-1575-162-00	Side Clutch Spring	2	
4	80-1575-142-00	Side Clutch Gear 38T	1	
3	80-1310-150-10	Shaft Pin	1	
2	80-1032-141-00	Side Clutch Gear 14T	2	
1	80-1032-140-00	Side Clutch Shaft	1	

Transmission 4/5

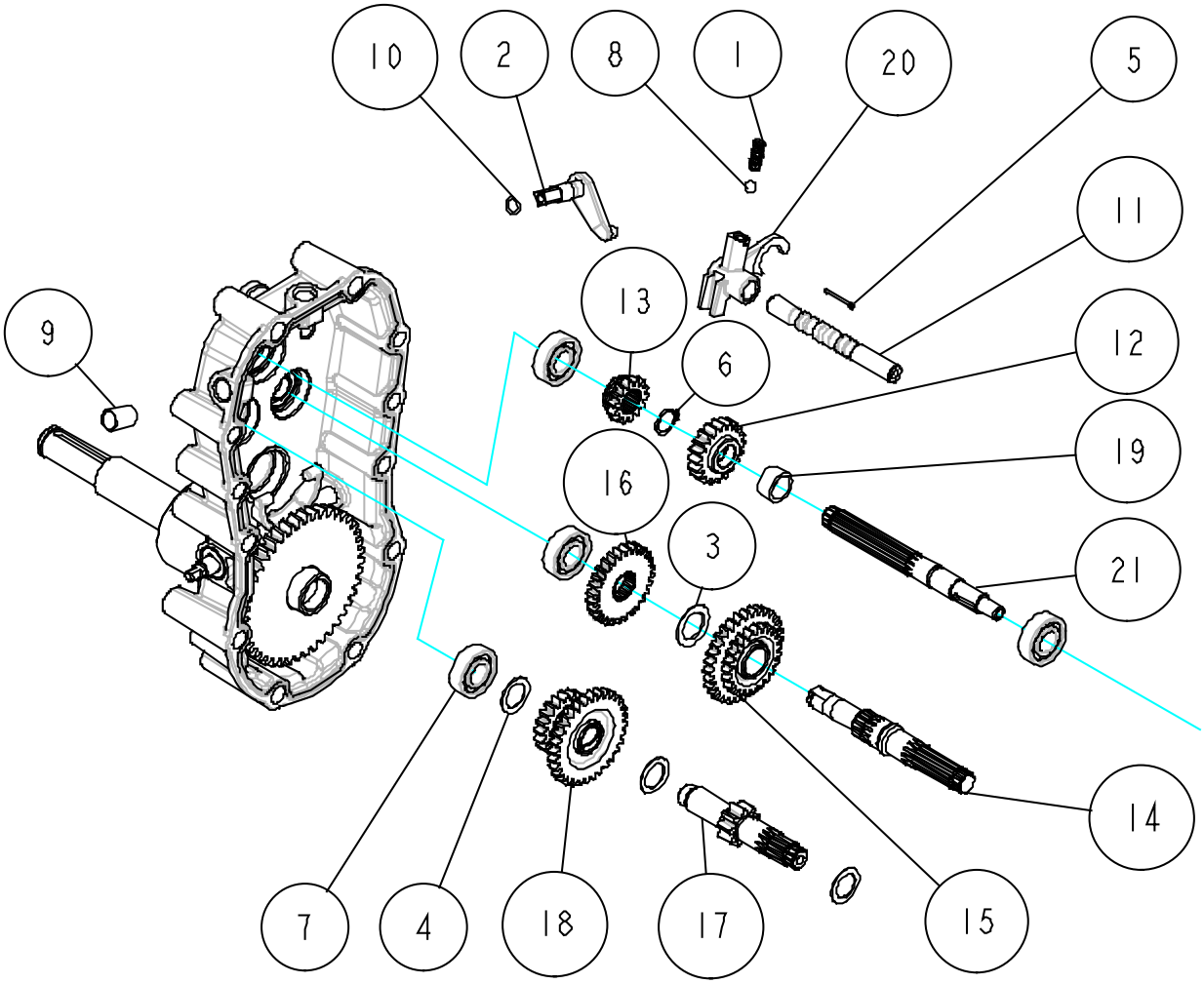

Ref.	Parts Number	Parts Name	Quantity	Remarks
21	0251-01100	Trasmission 1st Shaft	1	
20	0251-00300	Shift Folk	1	
19	0223-02400	Collar 11L	1	
18	0223-02100	3rd Shaft Gear 20T CMP	1	
17	0223-01400	3rd Shaft	1	
16	0223-01300	2nd Shaft Gear 28T	1	
15	0223-01200	Back Gear CMP	1	
14	0223-00800	2nd Shaft	1	
13	0223-00700	1st Shaft Shift Gear 14T	1	
12	0223-00600	1st Shaft Gear 20T	1	
11	0223-00400	Shift Fork Shaft	1	
10	89-5221-009000	O Ring P9	1	
9	89-3510-012200	DU Bush 12.20	1	
8	89-3410-075000	Steel Ball 7.5	1	
7	89-3111-062024	Bearing 6202	4	
6	89-2511-000160	Snap Ring (S16)	1	
5	89-2120-200202	Split Pin 2*20	1	
4	83-1830-368-00	Thrust Washer 18*26*1.0	3	
3	83-1310-371-00	Thrust Washer 20*30*1.0	1	
2	80-1575-109-00	Swing Arm	1	
1	80-1310-138-00	Spring 1.4	1	

Transmission 5/5

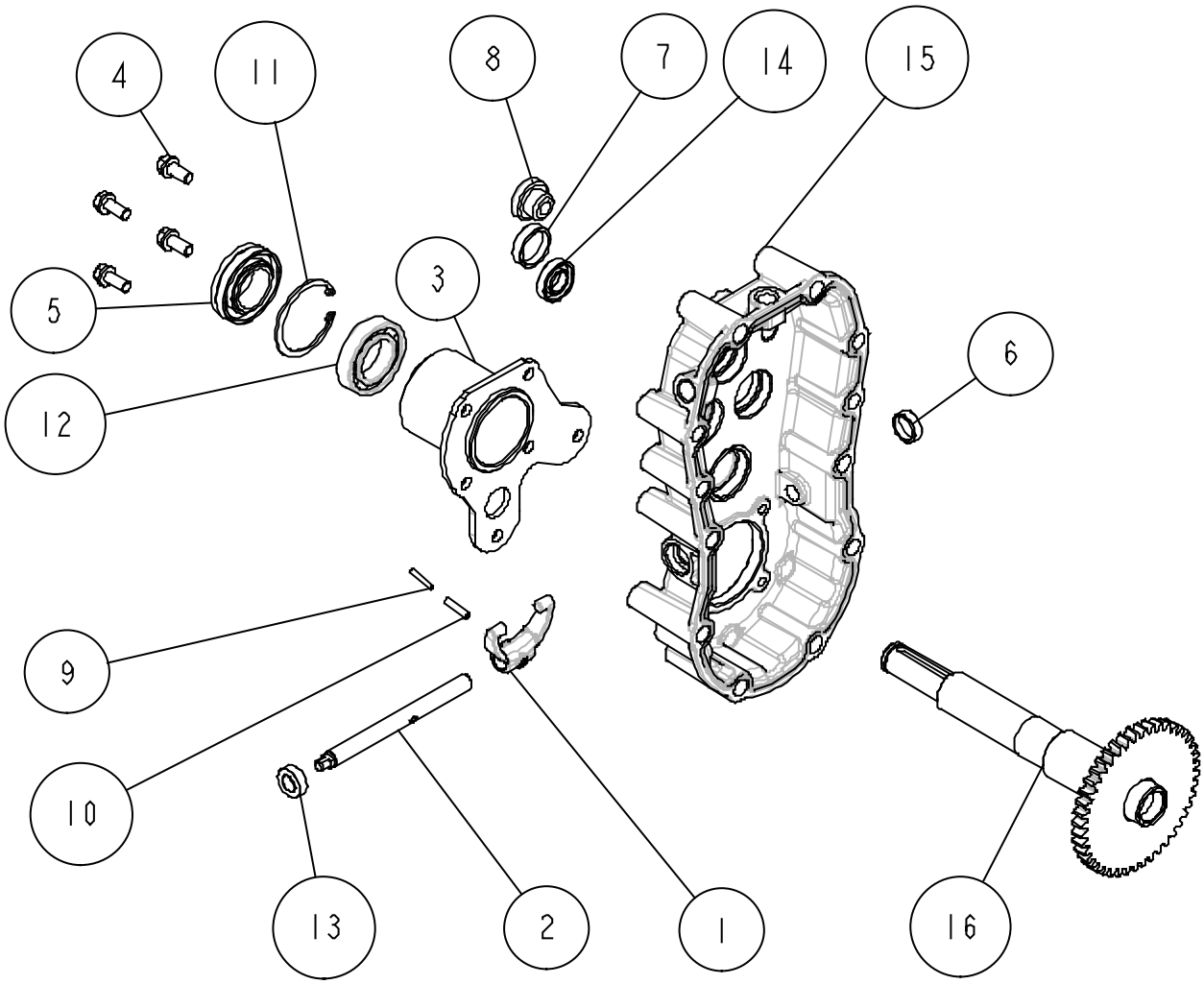

Ref.	Parts Number	Parts Name	Quantity	Remarks
16	0256-00100	Axle CMP	1	
15	0251-00100	Transmission Case (L)	1	
14	89-5121-153007	Oil Seal UE 15.30.7	1	
13	89-5121-122207	Oil Seal UE 12.22.7	1	
12	89-3111-060064	Bearing 6006	1	
11	89-2512-000550	Snap Ring (R55)	1	
10	89-2111-050020	Spring Pin 5*20	1	
9	89-2111-030020	Spring Pin 3*20	1	
8	83-1517-685-00	Oil Cap	1	
7	83-1415-672-00	Blind Cover 30	1	
6	83-1415-671-00	Blind Cover 22	1	
5	83-1415-662-00	Oil Seal AP 35.55.8	1	
4	83-1415-127-00	Seal Bolt (SW) M8*20	4	
3	80-1565-155-00	Shaft BB Case (L)	1	
2	80-1425-112-00	Driving Clutch Folk Shaft	1	
1	80-1415-114-00	Side Clutch Folk	1	

Rotary cover 1/5

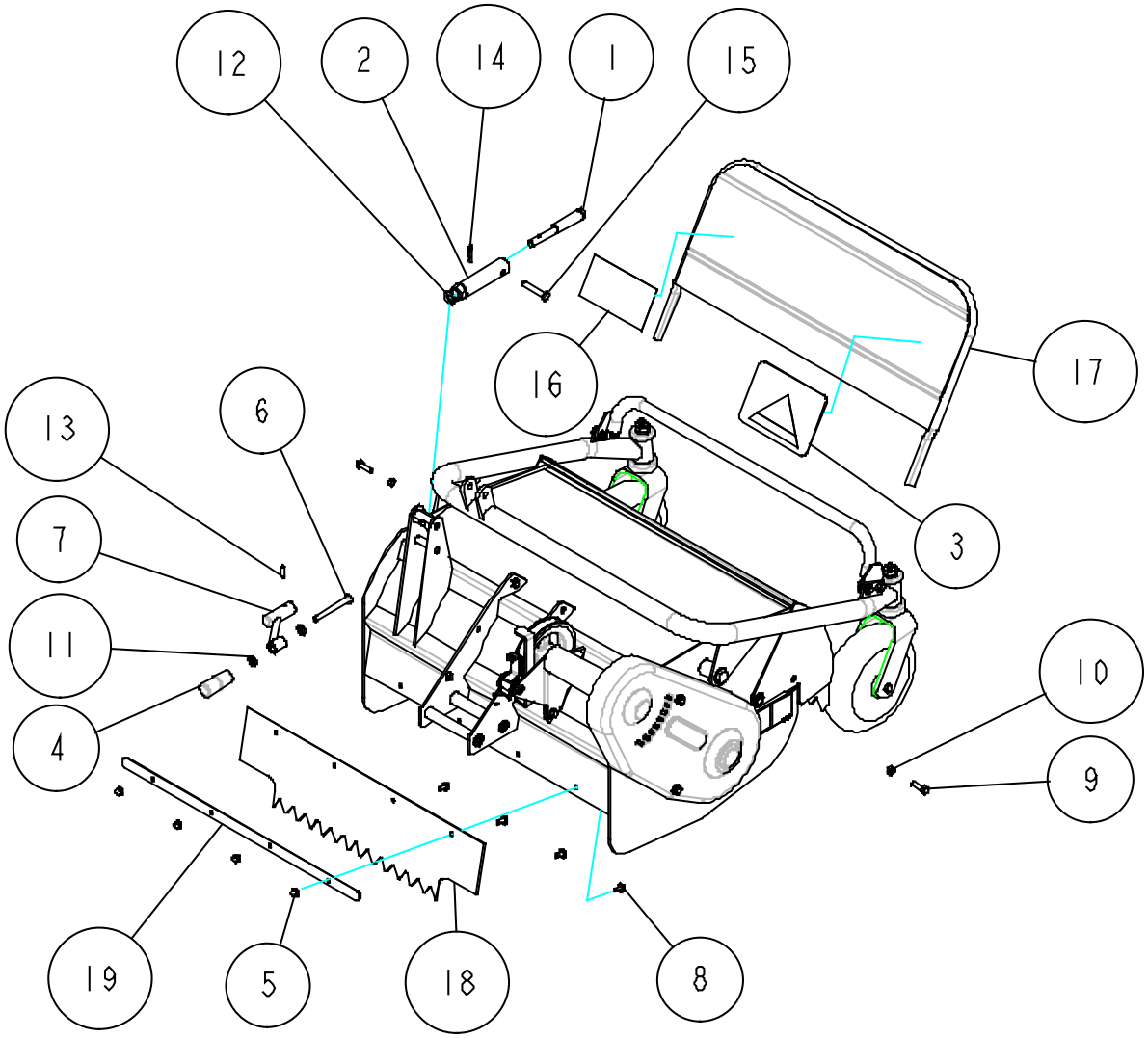

Ref.	Parts Number	Parts Name	Quantity	Remarks
19	0256-60600	Flapper Holder	1	
18	0256-60400	Rear Flapper	1	
17	0256-60100	Safety Cover	1	
16	0223-76100	Label, Caution (Large)	1	
15	89-2181-100502	Flat Head Pin 10*50	1	
14	89-2131-100002	Snap Pin 10	1	
13	89-2111-050022	Spring Pin 5*22	1	
12	89-1714-120002	Flat Washer 12	1	
11	89-1711-100002	Flat Washer 10	2	
10	89-1611-080042	Mini Hexagonal Nut M8	2	
9	89-1211-080252	Mini Hexagonal Bolt M8*25	2	
8	89-1137-060152	Hexagonal Bolt(PW) M6*15	4	
7	84-1723-739-00	Cutting Height Adjusting Handle	1	
6	83-1713-166-00	Round Head Pin 10*80	1	
5	83-1575-189-00	Flange Cap Nut M6	4	
4	83-1210-425-00	Lever Grip 10	1	
3	80-1614-906-00	Label, Safety Cover	1	
2	80-1614-742-10	Height Adjusting Bolt Receiver	1	
1	80-1614-724-10	Height Adjusting Bolt CMP	1	

Rotary cover 2/5

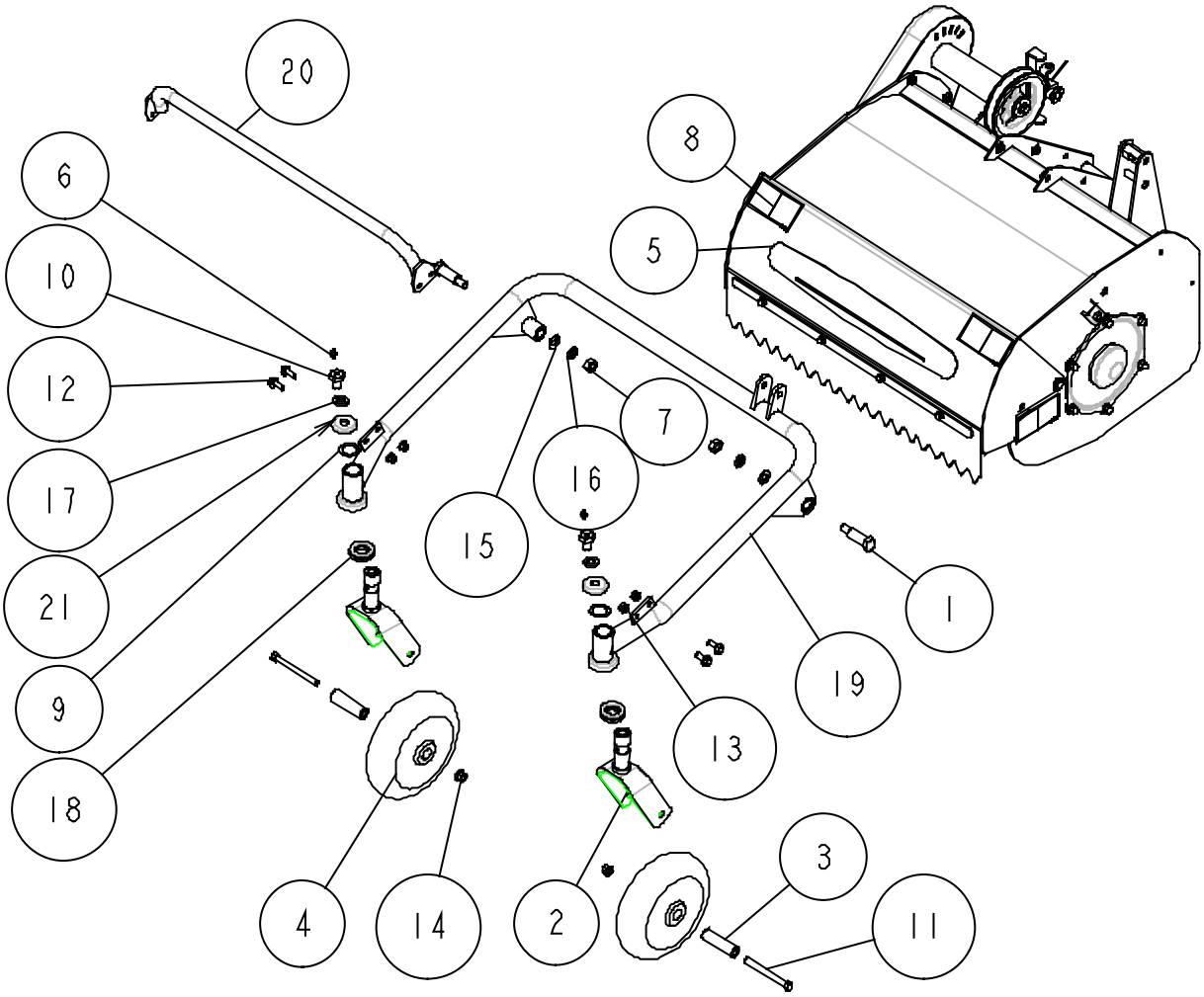

Ref.	Parts Number	Parts Name	Quantity	Remarks
21	84-1783-729-00	Dust Cover	2	
20	0256-60500	Front Bumper	1	
19	0256-60300	Front Arm CMP	1	
18	89-3370-051105	Thrust Bearing 51105	2	
17	89-1750-140002	Spring Washer 14	2	
16	89-1750-120002	Spring Washer 12	2	
15	89-1714-120002	Flat Washer 12	2	
14	89-1543-100002	Mini Hexagonal Nut(SW) M10	2	
13	89-1543-080002	Mini Hexagonal Nut (SW) M8	4	
12	89-1253-080202	Flange Hexagonal Bolt (8T) M8*20	4	
11	89-1211-100952	Mini Hexagonal Bolt M10*95	2	
10	84-1783-791-00	Grease Nipple Bolt M14	2	
9	83-1783-376-00	Thrust Washer 25*34*1.0	2	
8	83-1613-907-00	Label, Caution for Hand and Leg	2	
7	83-1610-192-00	Hexagonal Nut(slender) M12 P=1.25	2	
6	83-1415-975-00	Grease Nipple M6	2	
5	83-1050-901-00	Label, OREC	1	
4	80-1614-727-00	Front Wheel	2	
3	80-1614-726-00	Front Wheel Collar	2	
2	80-1614-725-20	Front Fork CMP	2	
1	80-1610-714-00	Front Arm Setting Shaft	2	

Rotary cover 3/5

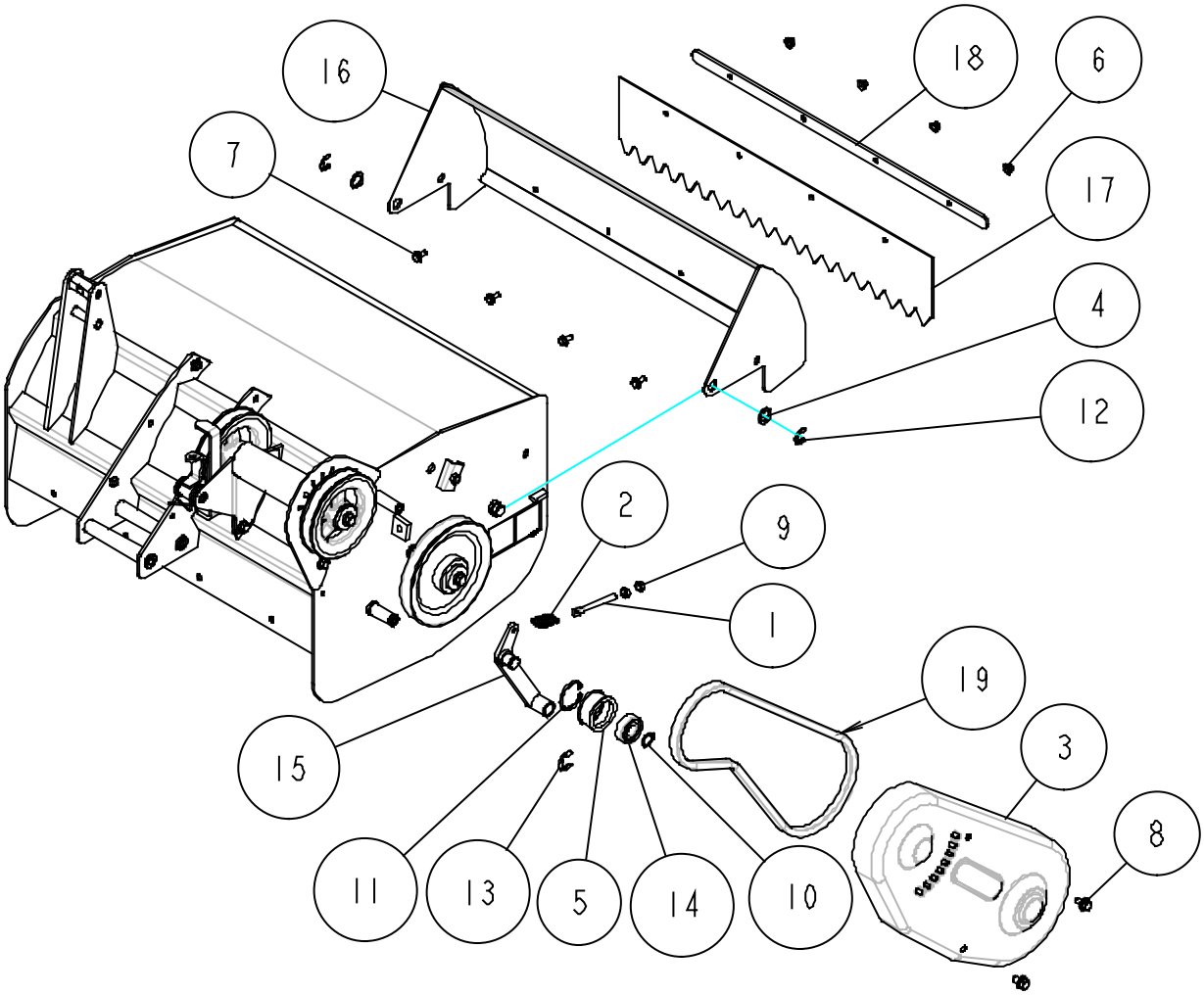

Ref.	Parts Number	Parts Name	Quantity	Remarks
19	89-6123-003901	V Belt LB-39	1	
18	0256-60600	Flapper Holder	1	
17	0256-60200	Front Flapper	1	
16	0256-50200	Front Cover CMP	1	
15	0211-63200	Front Tension Arm CMP	1	
14	89-3115-062034	Bearing 6203 2RS	1	
13	89-2521-000150	E Type Ring 15	1	
12	89-2521-000120	E Type Ring 12	2	
11	89-2512-000400	Snap Ring (R40)	1	
10	89-2511-000170	Snap Ring (S17)	1	
9	89-1611-080042	Mini Hexagonal Nut M8	2	
8	89-1233-080162	Mini Hexagonal Bolt (PWSW) M8*16	2	
7	89-1137-060152	Hexagonal Bolt(PW) M6*15	4	
6	83-1575-189-00	Flange Cap Nut M6	4	
5	83-1032-765-00	Tension Pulley	1	
4	80-1675-357-00	Washer 16*23*2.3	2	
3	80-1614-694-10	Knife Belt Cover	1	
2	80-1614-315-00	Return Spring	1	
1	80-1182-527-00	Tension Pulling Bolt	1	

Rotary cover 4/5

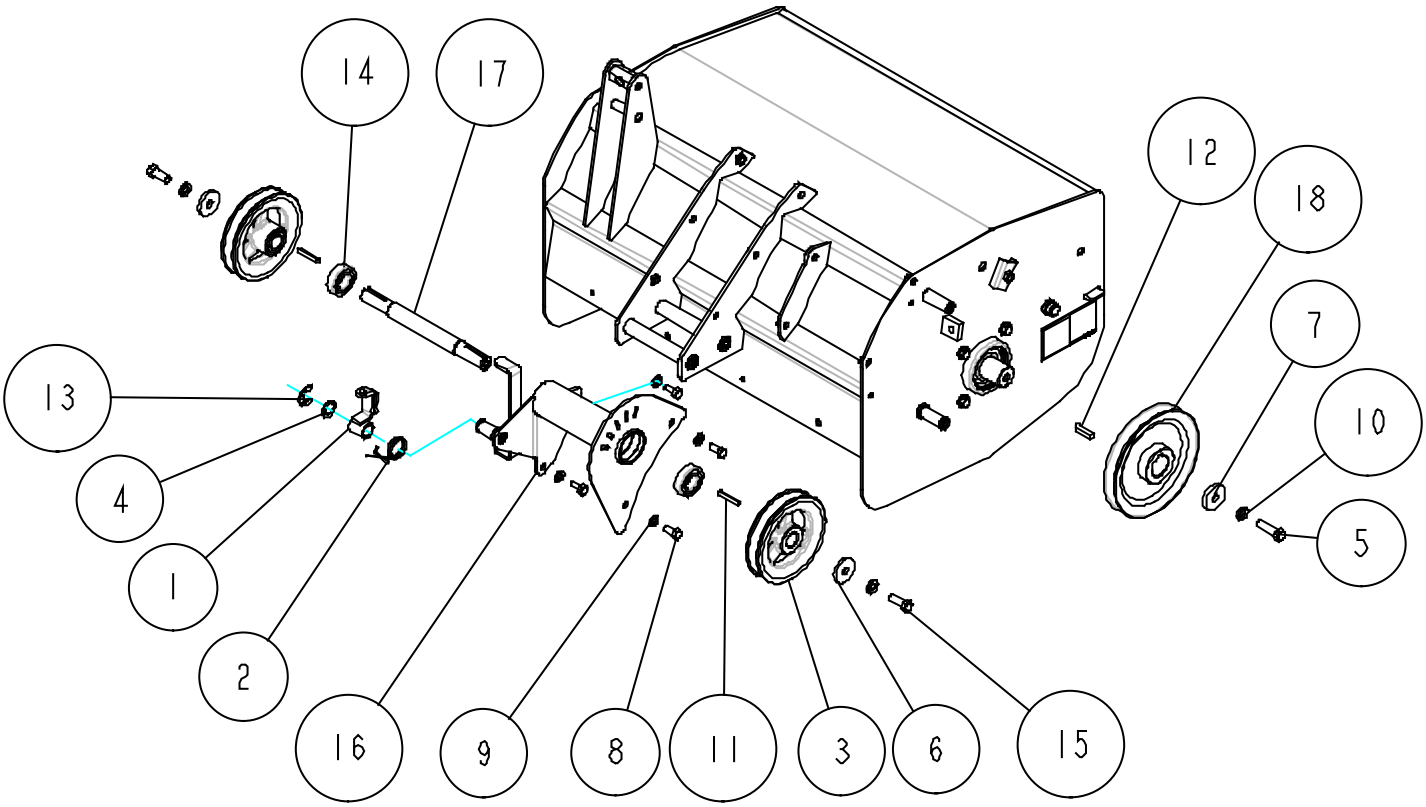

Ref.	Parts Number	Parts Name	Quantity	Remarks
18	0256-40500	Knife Pulley	1	
17	0256-40200	Supporter Shaft	1	
16	0256-40100	Supporter Pipe CMP	1	
15	0212-72100	Hexagonal Bolt(8T) M10*25(Meck)	2	
14	89-3115-060044	Bearing 6004 2RS	2	
13	89-2521-000150	E Type Ring 15	1	
12	89-2151-070300	Key 7*30 (Half Round)	1	
11	89-2151-050350	Key 5*35 (Half Round)	2	
10	89-1750-100002	Spring Washer 10	3	
9	89-1750-080002	Spring Washer 8	4	
8	89-1213-080182	Mini Hexagonal Bolt (8T) M8*18	4	
7	83-1610-322-00	Washer 10*36*6	1	
6	83-1610-321-00	Washer 10*36*4.5	2	
5	83-1610-125-00	Hexagonal Bolt(8T) M10x35	1	
4	83-1020-363-00	Thrust Washer 16*24*1.0	1	
3	80-1614-636-00	Supporter Pulley	2	
2	80-1614-373-20	Knife Brake Spring	1	
1	80-1417-371-00	Knife Brake	1	

Rotary cover 5/5

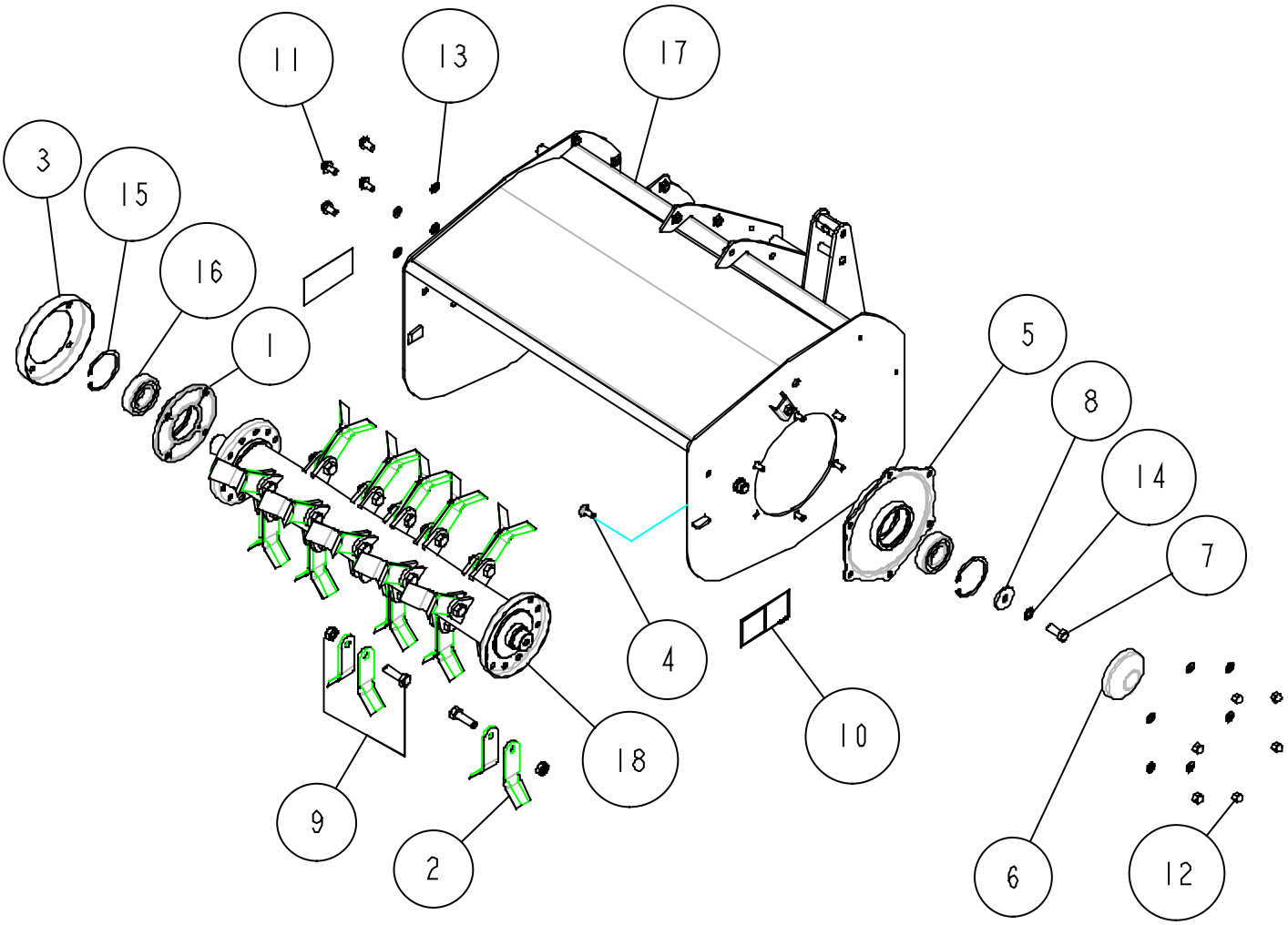

Ref.	Parts Number	Parts Name	Quantity	Remarks
18	0256-51000	Knife Drum ASSY	1	
17	0256-50100	Rotary Cover CMP	1	
16	89-3115-062064	Bearing 6206 2RS	2	
15	89-2512-000620	Snap Ring (R62)	2	
14	89-1812-100002	Tooth Washer 10	1	
13	89-1750-080002	Spring Washer 8	10	
12	89-1671-080042	Mini Hexagonal Cap Nut M8	6	
11	89-1253-080162	Flange Hexagonal Bolt (8T) M8*16	4	
10	83-1613-907-00	Label, Caution for Hand and Leg	2	
9	83-1610-835-00	Setting Bolt SET	16	
8	83-1610-321-00	Washer 10*36*4.5	1	
7	83-1610-124-00	Hexagonal Bolt(8T) M10x25(left screw	1	
6	80-1614-810-00	BB Case Cover	1	
5	80-1614-804-20	Knife Shaft BB Case CMP	1	
4	80-1614-705-00	Flat Head Bolt M8x18	6	
3	80-1612-813-00	Dust Cover	1	
2	80-1610-821-00	Hammer Knife Blade	32	
1	80-1610-804-00	BB Case	1	